ETC Reference Guide

High End Systems Halcyon Gold DMX Channel Map

Halcyon Gold DMX Channel Map

(Software Version 1.4.11 and Later)

Standard Protocol			
Channel	Function	Channel	Function
1	Pan Coarse	30	Animation
2	Pan Fine	31	Prism 1 Mode
3	Tilt Coarse	32	Prism 1 Coarse
4	Tilt Fine	33	Prism 1 Fine
5	Color Mode	34	Prism 2 Mode
6	Cyan	35	Prism 2 Coarse
7	Magenta	36	Prism 2 Fine
8	Yellow	37	Trifusion
9	CTO	38	Diffusion 1
10	Color Wheel Mode	39	Diffusion 2
11	Color Wheel	40	Diffusion 3
12	Rotating Gobo Wheel 1 Mode	41	Focus Coarse
13	Rotating Gobo Wheel 1	42	Focus Fine
14	Rotating Gobo 1 Mode	43	Zoom Coarse
15	Rotating Gobo 1 Coarse	44	Zoom Fine
16	Rotating Gobo 1 Fine	45	Auto Focus
17	Fixed Gobo Wheel 2 Mode	46	Auto Focus Fine
18	Fixed Gobo Wheel 2	47	Iris
19	Blade 1 Angle A	48	Strobe Mode
20	Blade 1 Angle B	49	Strobe
21	Blade 2 Angle A	50	Dimmer Coarse
22	Blade 2 Angle B	51	Dimmer Fine
23	Blade 3 Angle A	52	LED Animation
24	Blade 3 Angle B	53	LED Animation Speed
25	Blade 4 Angle A	54	LED Animation Crossfade
26	Blade 4 Angle B	55	mSpeed
27	Frame Rotate Coarse	56	Control
28	Frame Rotate Fine	57	Fan
29	Animation Insertion		

Corporate Headquarters ■ Middleton, WI, USA | +1 608 831 4116
Global Offices ■ London, UK | Rome, IT | Holzkirchen, DE | Paris, FR | Hong Kong | Dubai, UAE | Singapore
New York, NY | Orlando, FL | Los Angeles, CA | Austin, TX | © 2023 Electronic Theatre Controls, Inc.
Web etcconnect.com | **Support** support.etcconnect.com | **Contact** etcconnect.com/contactETC
Trademark and patent info: etcconnect.com/ip | Third-party license agreement info: etcconnect.com/licenses
Product information and specifications subject to change. ETC intends this document to be provided in its entirety.
2562M2400 Rev E Released 2023-12

Halcyon Gold Standard Protocol

Channel	Function	Description	Decimal Low	Decimal High	Percent Low	Percent High	Hex Low	Hex High	Controller Default
1/2	Pan (Coarse/Fine)	See note *6 on page 11*	0	65535	0%	100%	0000h	FFFFh	32767
3/4	Tilt (Coarse/Fine)	See note *6 on page 11*	0	65535	0%	100%	0000h	FFFFh	32767
5	Color Mode	**Full Speed Control**							0
		Pure Mix	0	31	0%	12%	00h	1Fh	
		Cycle	32	47	13%	18%	20h	2Fh	
		Random	48	63	19%	25%	30h	3Fh	
		Pure Mix Fast	64	79	25%	31%	40h	4Fh	
		Cycle Fast	80	95	31%	37%	50h	5Fh	
		Random Fast	96	111	38%	44%	60h	6Fh	
		Reserved (see note *5 on page 11*)	112	127	44%	50%	70h	7Fh	
		mSpeed Control							
		Pure Mix	128	159	50%	62%	80h	9Fh	
		Cycle	160	175	63%	69%	A0h	AFh	
		Random	176	191	69%	75%	B0h	BFh	
		Pure Mix Fast	192	207	75%	81%	C0h	CFh	
		Cycle Fast	208	223	82%	87%	D0h	DFh	
		Random Fast	224	239	88%	94%	E0h	EFh	
		Reserved (see note *5 on page 11*)	240	255	94%	100%	F0h	FFh	
6	Cyan	**Pure Mix**							255
		Full Saturation to Open (see note *1 on page 11*)	0	255	0%	100%	00h	FFh	
		Cycle & Random							0
		Slow to Fast	0	255	0%	100%	00h	FFh	
7	Magenta	Full Saturation to Open (see note *1 on page 11*)	0	255	0%	100%	00h	FFh	255
8	Yellow	Full Saturation to Open (see note *1 on page 11*)	0	255	0%	100%	00h	FFh	255
9	CTO	Full Saturation to Open	0	255	0%	100%	00h	FFh	255

Channel	Function	Description	Decimal Low	Decimal High	Percent Low	Percent High	Hex Low	Hex High	Controller Default
10	Color Wheel Mode	**Full Speed Control**							48
		Indexed (see note *1 on page 11*)	0	15	0%	6%	00h	0Fh	
		Forward Spin	16	31	6%	12%	10h	1Fh	
		Reverse Spin	32	47	13%	18%	20h	2Fh	
		Continuous (see note *1 on page 11*)	48	63	19%	25%	30h	3Fh	
		Scan	64	79	25%	31%	40h	4Fh	
		Random	80	95	31%	37%	50h	5Fh	
		Reserved (see note *5 on page 11*)	96	127	38%	50%	60h	7Fh	
		mSpeed Control							
		Indexed (see note *1 on page 11*)	128	143	50%	56%	80h	8Fh	
		Forward Spin	144	159	56%	62%	90h	9Fh	
		Reverse Spin	160	175	63%	69%	A0h	AFh	
		Continuous (see note *1 on page 11*)	176	191	69%	75%	B0h	BFh	
		Scan	192	207	75%	81%	C0h	CFh	
		Random	208	223	82%	87%	D0h	DFh	
		Reserved (see note *5 on page 11*)	224	255	88%	100%	E0h	FFh	

ETC Reference Guide
Halcyon Gold DMX Channel Map

Channel	Function	Description	Decimal Low	Decimal High	Percent Low	Percent High	Hex Low	Hex High	Controller Default
11	Color Wheel	**Indexed**							0
		Open (White)	0	14	0%	5%	00h	0Eh	
		Open/Red	15	29	6%	11%	0Fh	1Dh	
		Red	30	44	12%	17%	1Eh	2Ch	
		Red/Blue	45	59	18%	23%	2Dh	3Bh	
		Blue	60	74	24%	29%	3Ch	4Ah	
		Blue/TM-30	75	89	29%	35%	4Bh	59h	
		TM-30	90	104	35%	41%	5Ah	68h	
		TM-30/Purple	105	119	41%	47%	69h	77h	
		Purple	120	134	47%	53%	78h	86h	
		Purple/Orange	135	149	53%	58%	87h	95h	
		Orange	150	164	59%	64%	96h	A4h	
		Orange/Dark Blue	165	179	65%	70%	A5h	B3h	
		Dark Blue	180	194	71%	76%	B4h	C2h	
		Dark Blue/CTB	195	209	76%	82%	C3h	D1h	
		CTB	210	224	82%	88%	D2h	E0h	
		CTB/Open	225	239	88%	94%	E1h	EFh	
		Open (White)	240	255	94%	100%	F0h	FFh	
		Scan							
		Open/Red, Slow to Fast	0	29	0%	11%	00h	1Dh	
		Red/Blue, Slow to Fast	30	59	12%	23%	1Eh	3Bh	
		Blue/TM-30, Slow to Fast	60	89	24%	35%	3Ch	59h	
		TM-30/Purple, Slow to Fast	90	119	35%	47%	5Ah	77h	
		Purple/Orange, Slow to Fast	120	149	47%	58%	78h	95h	
		Orange/Dark Blue, Slow to Fast	150	179	59%	70%	96h	B3h	
		Dark Blue/CTB	180	209	71%	82%	B4h	D1h	
		CTB/Open, Slow to Fast	210	255	82%	100%	D2h	FFh	
		Spin & Random							
		Stop	0	0	0%	0%	00h	00h	
		Slow to Fast	1	255	0%	100%	01h	FFh	
		Continuous							
		Positioning from 0° to 359°	0	255	0%	100%	00h	FFh	

ETC Reference Guide
Halcyon Gold DMX Channel Map

Channel	Function	Description	Decimal Low	Decimal High	Percent Low	Percent High	Hex Low	Hex High	Controller Default
12	Rotating Gobo Wheel 1 Mode	**Full Speed Control**							0
		Indexed	0	15	0%	6%	00h	0Fh	
		Forward Spin	16	31	6%	12%	10h	1Fh	
		Reverse Spin	32	47	13%	18%	20h	2Fh	
		Scan	48	63	19%	25%	30h	3Fh	
		Random	64	79	25%	31%	40h	4Fh	
		Reserved (see note *5 on page 11*)	80	127	31%	50%	50h	7Fh	
		mSpeed Control							
		Indexed	128	143	50%	56%	80h	8Fh	
		Forward Spin	144	159	56%	62%	90h	9Fh	
		Reverse Spin	160	175	63%	69%	A0h	AFh	
		Scan	176	191	69%	75%	B0h	BFh	
		Random	192	207	75%	81%	C0h	CFh	
		Reserved (see note *5 on page 11*)	208	255	82%	100%	D0h	FFh	
13	Rotating Gobo Wheel 1 (see *Halcyon Gold Gobos on page 14*)	**Indexed**							0
		Open	0	15	0%	6%	00h	0Fh	
		Gobo 1 - Wiggle Lines	16	31	6%	12%	10h	1Fh	
		Gobo 2 - Mycelium	32	47	13%	18%	20h	2Fh	
		Gobo 3 - Bob's Brush	48	63	19%	25%	30h	3Fh	
		Gobo 4 - The Claw	64	79	25%	31%	40h	4Fh	
		Gobo 5 - Cut Cone	80	95	31%	37%	50h	5Fh	
		Gobo 6 - Split-S	96	111	38%	44%	60h	6Fh	
		Gobo 7 - Ice	112	127	44%	50%	70h	7Fh	
		Reserved (see note *5 on page 11*)	128	255	50%	100%	80h	FFh	
		Scan							
		Open/Wiggle Lines	0	15	0%	6%	00h	0Fh	
		Wiggle Lines/Mycelium	16	31	6%	12%	10h	1Fh	
		Mycelium/Bob's Brush	32	47	13%	18%	20h	2Fh	
		Bob's Brush/The Claw	48	63	19%	25%	30h	3Fh	
		The Claw/Cut Cone	64	79	25%	31%	40h	4Fh	
		Cut Cone/Split S	80	95	31%	37%	50h	5Fh	
		Split S/Ice	96	111	38%	44%	60h	6Fh	
		Ice/Open	112	127	44%	50%	70h	7Fh	
		Reserved (see note *5 on page 11*)	128	255	50%	100%	80h	FFh	
		Spin & Random							
		Stop	0	3	0%	1%	00h	03h	
		Slow to Fast	4	255	2%	100%	04h	FFh	
14	Rotating Gobo 1 Mode	Indexed	0	15	0%	6%	00h	0Fh	0
		Forward Spin	16	31	6%	12%	10h	1Fh	
		Reverse Spin	32	47	13%	18%	20h	2Fh	
		Forward Animate	48	63	19%	25%	30h	3Fh	
		Reverse Animate	64	79	25%	31%	40h	4Fh	
		Reserved (see note *5 on page 11*)	80	255	31%	100%	50h	FFh	

Channel	Function	Description	Decimal Low	Decimal High	Percent Low	Percent High	Hex Low	Hex High	Controller Default
15/16	Rotating Gobo 1 (Coarse/Fine)	**Indexed**							32767
		0° to 359°	0	65535	0%	100%	0000h	FFFFh	
		Spin & Animate							
		Stop	0	1023	0%	2%	0000h	03FFh	
		Slow to Fast	1024	65535	2%	100%	0400h	FFFFh	
17	Fixed Gobo Wheel 2 Mode	**Full Speed Control**							0
		Indexed	0	15	0%	6%	00h	0Fh	
		Forward Spin	16	31	6%	12%	10h	1Fh	
		Reverse Spin	32	47	13%	18%	20h	2Fh	
		Scan	48	63	19%	25%	30h	3Fh	
		Random	64	79	25%	31%	40h	4Fh	
		Reserved (see note *5 on page 11*)	80	127	31%	50%	50h	7Fh	
		mSpeed Control							
		Indexed	128	143	50%	56%	80h	8Fh	
		Forward Spin	144	159	56%	62%	90h	9Fh	
		Reverse Spin	160	175	63%	69%	A0h	AFh	
		Scan	176	191	69%	75%	B0h	BFh	
		Random	192	207	75%	81%	C0h	CFh	
		Reserved (see note *5 on page 11*)	208	255	82%	100%	D0h	FFh	

Channel	Function	Description	Decimal Low	Decimal High	Percent Low	Percent High	Hex Low	Hex High	Controller Default
18	Fixed Gobo Wheel 2 (see *Halcyon Gold Gobos on page 14*)	**Indexed**							0
		Open	0	15	0%	6%	00h	0Fh	
		Gobo 1 - Texture Drops	16	31	6%	12%	10h	1Fh	
		Gobo 2 - Lovely Bubbly	32	47	13%	18%	20h	2Fh	
		Gobo 3 - Art Ducko	48	63	19%	25%	30h	3Fh	
		Gobo 4 - Window Matrix	64	79	25%	31%	40h	4Fh	
		Gobo 5 - Swirly Gig	80	95	31%	37%	50h	5Fh	
		Gobo 6 - Fenced In	96	111	38%	44%	60h	6Fh	
		Gobo 7 - The Only Way Is Up	112	127	44%	50%	70h	7Fh	
		Gobo 8 - Repeater	128	143	50%	56%	80h	8Fh	
		Reserved (see note *5 on page 11*)	144	255	56%	100%	90h	FFh	
		Scan							
		Open/Texture Drops	0	15	0%	6%	00h	0Fh	
		Texture Drops/Lovely Bubbly	16	31	6%	12%	10h	1Fh	
		Lovely Bubbly/Art Ducko	32	47	13%	18%	20h	2Fh	
		Art Ducko/Window Matrix	48	63	19%	25%	30h	3Fh	
		Window Matrix/Swirly Gig	64	79	25%	31%	40h	4Fh	
		Swirly Gig/Fenced In	80	95	31%	37%	50h	5Fh	
		Fenced In/The Only Way Is Up	96	111	38%	44%	60h	6Fh	
		The Only Way Is Up/Repeater	112	127	44%	50%	70h	7Fh	
		Repeater/Open	128	143	50%	56%	80h	8Fh	
		Reserved (see note *5 on page 11*)	144	255	56%	100%	90h	FFh	
		Spin & Random							
		Stop	0	3	0%	1%	00h	03h	
		Slow to Fast	4	255	2%	100%	04h	FFh	
19	Blade 1 Angle A (see note *7 on page 12*)	Removed to Inserted	0	255	0%	100%	00h	FFh	0
20	Blade 1 Angle B (see note *7 on page 12*)	Removed to Inserted	0	255	0%	100%	00h	FFh	0
21	Blade 2 Angle A (see note *7 on page 12*)	Removed to Inserted	0	255	0%	100%	00h	FFh	0
22	Blade 2 Angle B (see note *7 on page 12*)	Removed to Inserted	0	255	0%	100%	00h	FFh	0
23	Blade 3 Angle A (see note *7 on page 12*)	Removed to Inserted	0	255	0%	100%	00h	FFh	0
24	Blade 3 Angle B (see note *7 on page 12*)	Removed to Inserted	0	255	0%	100%	00h	FFh	0
25	Blade 4 Angle A (see note *7 on page 12*)	Removed to Inserted	0	255	0%	100%	00h	FFh	0
26	Blade 4 Angle B (see note *7 on page 12*)	Removed to Inserted	0	255	0%	100%	00h	FFh	0
27/28	Frame Rotate (Coarse/Fine)	-90° to 90°	0	65535	0%	100%	0000h	FFFFh	32767

Channel	Function	Description	Decimal Low	Decimal High	Percent Low	Percent High	Hex Low	Hex High	Controller Default
29	Animation Insertion	Animation Out	0	1	0%	0%	00h	01h	0
		Gradual Insertion	2	110	1%	43%	02h	6Eh	
		Full Insert	111	111	44%	44%	6Fh	6Fh	
		Adjust Incline	112	255	44%	100%	70h	FFh	
30	Animation	Forward Spin, Stop to Fast	0	63	0%	25%	00h	3Fh	0
		Reverse Spin, Stop to Fast	64	127	25%	50%	40h	7Fh	
		Forward Animate, Stop to Fast	128	191	50%	75%	80h	BFh	
		Reverse Animate, Stop to Fast	192	255	75%	100%	C0h	FFh	
31	Prism 1 Mode	Removed	0	15	0%	6%	00h	0Fh	0
		Continuous	16	31	6%	12%	10h	1Fh	
		Forward Spin	32	47	13%	18%	20h	2Fh	
		Reverse Spin	48	63	19%	25%	30h	3Fh	
		Forward Animate	64	79	25%	31%	40h	4Fh	
		Reverse Animate	80	95	31%	37%	50h	5Fh	
		Reserved (see note *5 on page 11*)	96	255	38%	100%	60h	FFh	
32/33	Prism 1 (Coarse/Fine)	**Continuous**							32767
		0° to 359°	0	65535	0%	100%	0000h	FFFFh	
		Spin & Animate							0
		Stop	0	102	0%	0%	0000h	0066h	
		Slow to Fast	1024	65535	2%	100%	0400h	FFFFh	
34	Prism 2 Mode	Removed	0	15	0%	6%	00h	0Fh	0
		Continuous	16	31	6%	12%	10h	1Fh	
		Forward Spin	32	47	13%	18%	20h	2Fh	
		Reverse Spin	48	63	19%	25%	30h	3Fh	
		Forward Animate	64	79	25%	31%	40h	4Fh	
		Reverse Animate	80	95	31%	37%	50h	5Fh	
		Reserved (see note *5 on page 11*)	96	255	38%	100%	60h	FFh	
35/36	Prism 2 (Coarse/Fine)	**Continuous**							32767
		0° to 359°	0	65535	0%	100%	0000h	FFFFh	
		Spin & Animate							0
		Stop	0	1023	0%	2%	0000h	03FFh	
		Slow to Fast	1024	65535	2%	100%	0400h	FFFFh	
37	Trifusion	Hard to Soft Edge	0	255	0%	100%	00h	FFh	0
38	Diffusion 1	**Trifusion Channel = 0**							0
		Removed	0	0	0%	0%	00h	00h	
		Hard to Soft Edge	1	255	0%	100%	01h	FFh	
		Trifusion Channel ≥ 1							–
		Not Enabled	–	–	–	–	–	–	
39	Diffusion 2	**Trifusion Channel = 0**							0
		Removed	0	0	0%	0%	00h	00h	
		Hard to Soft Edge	1	255	0%	100%	01h	FFh	
		Trifusion Channel ≥ 1							–
		Not Enabled	–	–	–	–	–	–	

ETC Reference Guide

Halcyon Gold DMX Channel Map

Channel	Function	Description	Decimal Low	Decimal High	Percent Low	Percent High	Hex Low	Hex High	Controller Default
40	Diffusion 3	**Trifusion Channel = 0**							0
		Removed	0	0	0%	0%	00h	00h	
		Hard to Soft Edge	1	255	0%	100%	01h	FFh	
		Trifusion Channel ≥ 1							–
		Not Enabled	–	–	–	–	–	–	
41/42	Focus (Coarse/Fine)	Focus	0	65535	0%	100%	0000h	FFFFh	32767
43/44	Zoom (Coarse/Fine)	6° to 57°	0	65535	0%	100%	0000h	FFFFh	32767
45/46	Auto Focus (Coarse/Fine)	Auto Focus Off	0	1023	0%	2%	0000h	03FFh	0
		Auto Focus On (Focus In to Out)	1024	65535	2%	100%	0400h	FFFFh	
47	Iris	Closed to Open	0	255	0%	100%	00h	FFh	255
48	Strobe Mode	Normal	0	15	0%	6%	00h	0Fh	0
		Random	16	31	6%	12%	10h	1Fh	
		Synchronous Random (see note *3 on page 11*)	32	47	13%	18%	20h	2Fh	
		Reserved (see note *5 on page 11*)	48	255	19%	100%	30h	FFh	
49	Strobe	Closed	0	0	0%	0%	00h	00h	0
		Slow to Fast	1	254	0%	100%	01h	FEh	
		Open	255	255	100%	100%	FFh	FFh	
50/51	Dimmer (Coarse/Fine)	Off to Full	0	65535	0%	100%	0000h	FFFFh	0
52	LED Animation (see note *2 on page 11* and *Halcyon Gold LED Macros on page 13*)	Macro Off	0	3	0%	1%	00h	03h	0
		Macro 1: L to R	4	7	2%	3%	04h	07h	
		Macro 2: R to L	8	11	3%	4%	08h	0Bh	
		Macro 3: Alternate	12	15	5%	6%	0Ch	0Fh	
		Macro 4: In	16	19	6%	7%	10h	13h	
		Macro 5: Out	20	23	8%	9%	14h	17h	
		...							
		Reserved (see note *5 on page 11*)	24	255	9%	100%	18h	FFh	
53	LED Animation Speed	Stop to Fast	0	255	0%	100%	00h	FFh	128
54	LED Animation Crossfade	Stop to Fast	0	255	0%	100%	00h	FFh	128
55	mSpeed	Not Enabled	0	3	0%	1%	00h	03h	0
		Longest to Shortest	4	255	2%	100%	04h	FFh	

Channel	Function	Description	Decimal Low	Decimal High	Percent Low	Percent High	Hex Low	Hex High	Controller Default
56	Control	No hold time requirement for the following functions (see note *8 on page 12*):							0
		Idle	0	15	0%	6%	00h	0Fh	
		Pan and Tilt mSpeed Off	16	19	6%	7%	10h	13h	
		Reserved (see note *5 on page 11*)	20	31	8%	12%	14h	1Fh	
		Hold time requirement for the following functions:							
		Display Off (3 s)	32	47	13%	18%	20h	2Fh	
		Display On (3 s)	48	63	19%	25%	30h	3Fh	
		Reserved (see note *5 on page 11*)	64	79	25%	31%	40h	4Fh	
		Home All (3 s)	80	95	31%	37%	50h	5Fh	
		Shutdown (9 s)	96	111	38%	44%	60h	6Fh	
		Disable Pan/Tilt Motors (3 s) (see note *9 on page 12*)	112	127	44%	50%	70h	7Fh	
		Dimming Mode - 2.4 kHz (3 s)	128	143	50%	56%	80h	8Fh	
		Dimming Mode - 16 kHz (3 s)	144	159	56%	62%	90h	9Fh	
		Reserved (see note *5 on page 11*)	160	167	63%	65%	A0h	A7h	
		Gobo Color Correction On (3 s)	168	175	66%	69%	A8h	AFh	
		Gobo Color Correction Off (3 s)	176	191	69%	75%	B0h	BFh	
		CMY Curve Color Linear (3 s) (see note *10 on page 12*)	192	207	75%	81%	C0h	CFh	
		CMY Curve Mech Linear (3 s) (see note *10 on page 12*)	208	223	82%	87%	D0h	DFh	
		Reserved (see note *5 on page 11*)	224	255	88%	100%	E0h	FFh	
57	Fan (see note *4 on page 11*)	Idle	0	15	0%	6%	00h	0Fh	0
		Slow to Fast	16	207	6%	81%	10h	CFh	
		Auto	208	223	82%	87%	D0h	DFh	
		Studio	224	239	88%	94%	E0h	EFh	
		Reserved (see note *5 on page 11*)	240	255	94%	100%	F0h	FFh	

Notes

1

Continuous, Indexed, and Pure Mix modes should take the quickest path from 255–0 and 0–255.
Continuous mode color wheel aperture centers are as follows:

Color	Center of Color DMX Value
Open	0
Red	32
Blue	64
TM-30	93
Purple	127
Orange	159
Dark Blue	191
CTB	223

2

Macros operate independently. The Xfade and speed channels act as multipliers of the programmed speed in the discrete macro steps.

Speed/Xfade Channel Operation

Channel	Description
0	Stops playback or cross fade
1–127	Decreases playback speed/cross fade time (*<1)
128	Playback or cross fade speed is as programmed (*1)
129–255	Increases playback speed/cross fade time (*>1)

3

Synchronous random strobes are synchronized across fixtures.

4

Upon loss of DMX, the fixture retains the fan mode setting but does not retain the linear fan speed setting. To retain the linear fan speed setting, park the DMX values to ensure the correct speed is always present when DMX is present.

5

Reserved ranges should function according to the controller default value.

6

DMX Fixture Orientation
(Tilt Movement Range: 259°; Pan Movement Range: 540°)
(Pan and tilt lock locations are highlighted in orange.)

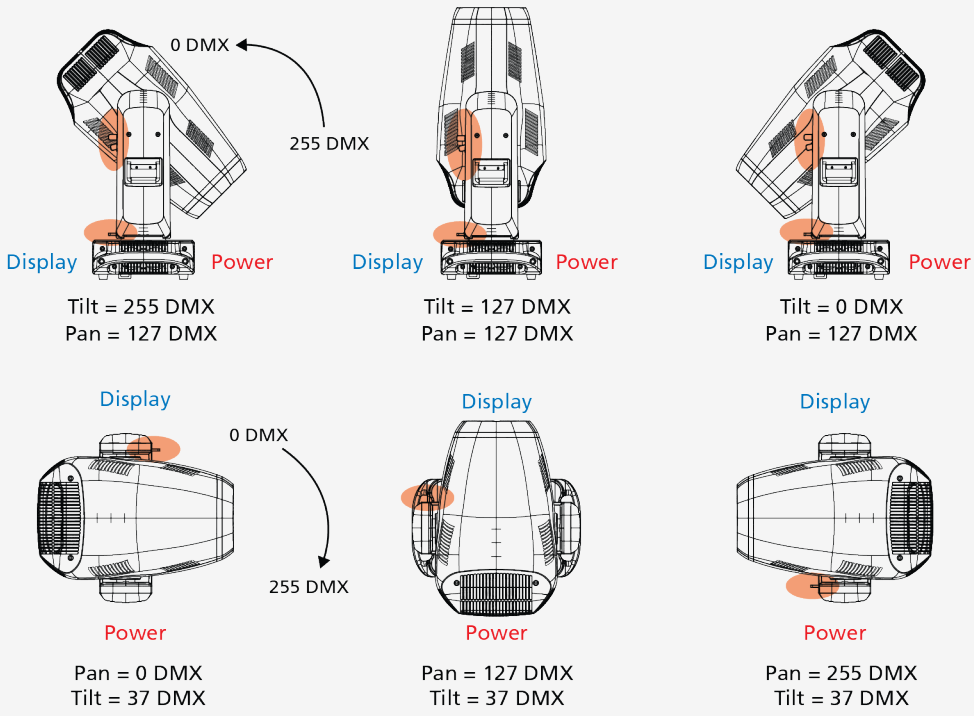

7	Framing blades are arranged according to the graphic below. For full-curtain framing, set blades 2A and 2B (channels 21 and 22) at or near 100%. 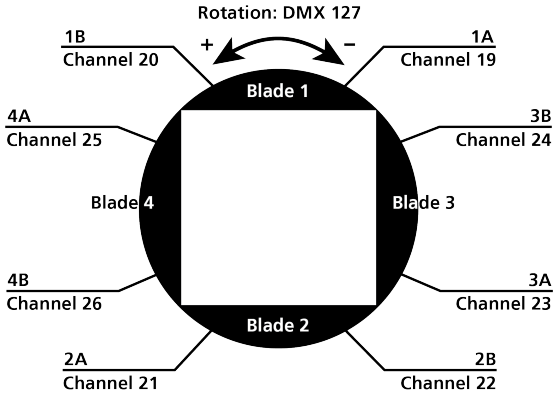 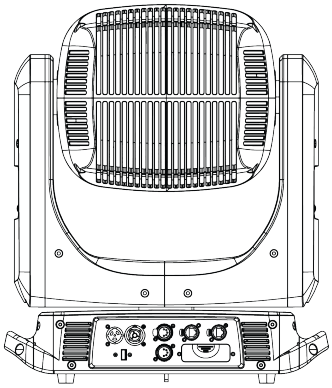 Pan: DMX 127 Tilt: DMX 37
8	Control channel functions with no hold time requirement must apply upon receipt.
9	Upon loss of power, the fixture does not retain the disable pan/tilt motors setting.
10	Upon loss of power, the fixture retains the color curve setting.
11	RDM Manufacturer ID: 0x4c52
12	RDM Device IDs • Halcyon Gold Ultra-Bright: 0x2F03 • Halcyon Gold High CRI: 0x2F04

Halcyon Gold LED Macros

All macros are defined from left to right assuming the fixture is sitting on a table with the pan lock facing you.

LED	Symbol
LED1	◑
LED2	○
LED3	●
LED4	⊙

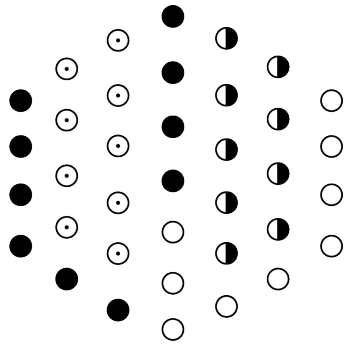

Macro 1: L to R				
Step	LED1	LED2	LED3	LED4
1	0	0	255	0
2	0	0	0	255
3	255	0	0	0
4	0	255	0	0

Macro 2: R to L				
Step	LED1	LED2	LED3	LED4
1	0	255	0	0
2	255	0	0	0
3	0	0	0	255
4	0	0	255	0

Macro 3: Alternate				
Step	LED1	LED2	LED3	LED4
1	255	255	0	0
2	0	0	255	255

Macro 4: In				
Step	LED1	LED2	LED3	LED4
1	255	0	0	0
2	0	0	0	255

Macro 5: Out				
Step	LED1	LED2	LED3	LED4
1	0	255	0	0
2	0	0	255	0

Halcyon Gold Gobos

Rotating Gobo Wheel 1

Position	Name	Image
0	Open	N/A
1	Wiggle Lines	
2	Mycelium	
3	Bob's Brush	
4	The Claw	
5	Cut Cone	
6	Split-S	
7	Ice	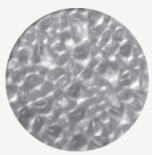

Fixed Gobo Wheel 2

Position	Name	Image
0	Open	N/A
1	Texture Drops	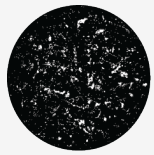
2	Lovely Bubbly	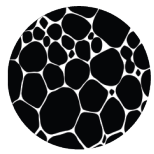
3	Art Ducko	
4	Window Matrix	
5	Swirly Gig	
6	Fenced In	
7	The Only Way Is Up	
8	Repeater	

Revision History

Revision	Change	Release Date
E	Added CMY Curve Color Linear and CMY Curve Mech Linear to the Control channel, and added note 10.	December 2023
D	Added note 9.	August 2023
C	Corrected Controller Default values for Pan (channels 1 and 2) and Tilt (channels 3 and 4). Added mSpeed Control to Color Mode (channel 5), Color Wheel Mode (channel 10), Rotating Gobo Wheel 1 Mode (channel 12), and Fixed Gobo Wheel 2 Mode (channel 17). Added fast modes to Color Mode (channel 5). Updated the Controller Default value for Color Wheel Mode (channel 10). Updated the Decimal Low and Decimal High values for mSpeed (channel 55). Added Pan and Tilt mSpeed Off to Control (channel 56), and identified the hold time requirements for the Control channel functions. Added notes 2 and 8 to the Notes section. Added Pure Mix to the list of modes in note 1. Split the Indexed Mode and Scan Mode into two sections in Rotating Gobo Wheel 1 (channel 13) and Fixed Gobo Wheel 2 (channel 18).	June 2023
B	Expanded the Animation Insertion Function to include "Animation Out" and "Gradual Insertion." Updated the Auto Focus channels with 16-bit function data. Corrected the Decimal High, Hex High , and Controller Default values for the Focus and Zoom channels.	May 2023
A	Initial release.	November 2022